installation manual

VC8000 Series

100V LINE SPEAKER VOLUME CONTROLLERS

Thank you for selecting another fine product from Amperes.

VC8000 succeeded the popular VC7000 series with new slimmer facial outlooks, fitting the contemporary architectural need in any installations. Apart from that, the unit has been reconstructed to withstand damaging factors such as drops and improper installations.

The new " slip contour " of the rotary knob has a great purpose - to eliminate potential abuse during rotation, which could overturn the knob and cause damage to the unit and possibility to the power amplifiers.

Installing this unit shall not be difficult but a thorough read through of this manual is recommended in order to avoid any undesired results and also to tap the full potential of what this unit could offer.

Please keep this manual for future references.

PARTS IDENTIFICATIONS

Rotary Knob

This knob shall be the last item to be installed to the spindle of the rotary switch.

The slip grip contour design reduces the potential overturn of the unit which could damage the volume controller as well as possible damage to the power amplifier.

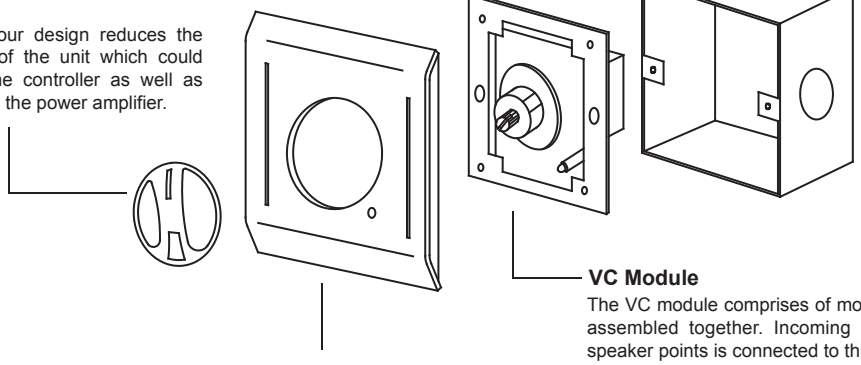

Back Enclosure

Back enclosure is available as optional item which is sold separately.

The recommended depth of back enclosure shall be about 50 - 60 mm between the finish surface of the wall and the back surfaceof the box. Standard electrical back box when used must be embedded to the wall with the required depth.

Surface mount back enclosure is also available with white finishing.

VC Module

The VC module comprises of mounting bracket and the electronic parts assembled together. Incoming cabling from power amplifier and to speaker points is connected to this module.

Module is available in several range of power rating : from 5 watts to 50 watts 100V line. Ensure correct power rating for the appropriate load.

Front Plate

The ABS front plate shall be mounted to the VC module by inserting the pins to the appropriate mounting hole of the mounting bracket. Standard colour available is off white

INSTALLATION PROCEDURES

1. Connect Cables

Cables from amplifier, to speakers and the overriding 24V DC shall be connected to the module before mounting to the back enclosures.

Recommended cable size shall not be more than 2.5mm sq.

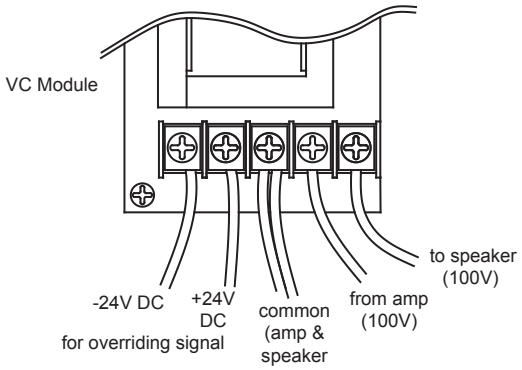

Rear view of module .. transformer at top

2. Install VC Module to Back Enclosure

Install the cabled VC module to the back enclosure using M3 screw provided.

For ease of installation, please do not allow too lengthy cables which may also cause damage to the VC module during installation.

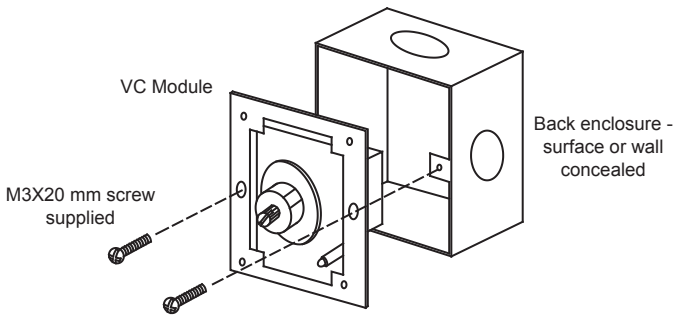

Cable connections not shown

INSTALLATION (CON'T)

2. Install Front Panel

Install the front panel with the 4 locking pins inserted to the mounting bracket of the VC module. Also ensure that the LED is properly aligned to the LED indicator aperture.

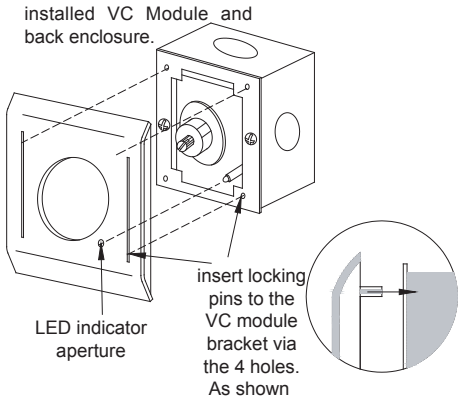

3. Install Switch Knob

Follow the 3 steps below when installing the switch knob.

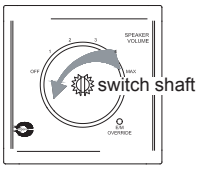

A. Turn the switch shaft counter clock wise till the end, the OFF position

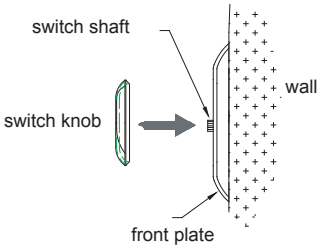

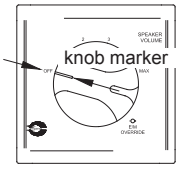

B. Align the OFF position at the plate with the marker of the knob before insert it to the switch shaft as shown.

C. Once the alignment of the knob marker and OFF position is confirmed, push the knob fully towards the shaft.

SCHEMATIC DIAGRAM

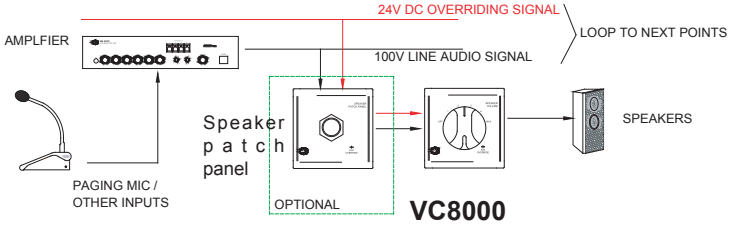

Note :
Use appropriate cable size for ease of termination at the volume controller or the patch panel.

Optional local speaker patch panel shall be installed before volume controller.

SPECIFICATIONS

Variants of Model	VC8005 - 5W 100V Resistive VC8010 - 10W 100V Auto trans VC8030 - 30W 100V Auto trans VC8050 - 50W 100V Auto trans
Overriding voltage	24V DC
Overriding current	15 mA
Attenuation / step	-6 dB
Size of plate	86 x 86 mm
Weight	VC8005 - 200 gms VC8010 - 250 gms VC8030 - 255 gms VC8050 - 275 gms
Optional item :	
Concealed back encl	72(W) x 72(H) x 60(D) mm : rainbow plated
Surface back encl	85(W) x 85(H) x 60(D) mm : white

Recommended back enclosure is 60 mm. For standard electrical back enclosure, ensure that the depth to be appr.60 mm from the finished wall surface.

TERMS AND CONDITIONS OF WARRANTY

Only Amperes Electronics Service Centres are allowed to make warranty repairs: a list of Amperes Electronics Service Centres may be asked for by the purchaser or send directly to Amperes Electronics Sdn Bhd at 70 Jalan Industri PBP3, Tmn Perindustrian Pusat Bandar Puchong 47100 Puchong or through its authorised distributors in your region. This warranty is not valid if repairs are performed by unauthorised personnel or service centres.

This warranty covers only repairs and replacement of defective parts; cost and risks of transportation as well as removal and installation of the product from the main system are for the account of the purchaser. This warranty shall not extend to the replacement of the unit.

This warranty does not cover damages caused by misuse, neglect, accident of the product as well as using the product with power supply voltage other than shown on the product, or any other power source/adaptor not recommended by the manufacturer.

This warranty does not cover damages caused by fire, earthquakes, floods, lighting and every cause not directly related to the unit.

This warranty does not include any indemnity in favour of the purchaser or the dealer for the period out of use of the unit; moreover the warranty does not cover any damages which may be caused to people and things when using the product.

This warranty certificate is valid only for the described product, and is not valid if modifications are made on this certificate or on the identification label applied on the product.

This warranty covers all the material and manufacturing defects and is valid for a period of 12 months from the date of purchase or for a longer period in countries where this is stated by a national law. In this case, the extension is valid only in the country where the product is purchased.

Amperes Electronics Sdn Bhd is not obliged to modify previously manufactured products under warranty if the design changes or improvements are made.

DISCLAIMER

Information contained in this manual is subject to change without prior notice and does not represent a commitment on the part of the vendor. AMPERES ELECTRONICS SDN BHD shall not be liable for any loss or damages whatsoever arising from the use of information or any error contained in this manual.

It is recommended that all services and repairs on this product be carried out by AMPERES ELECTRONICS SDN BHD or its authorised service agents.

AMPERES series must only be used for the purpose they were intended by the manufacturer and in conjunction with this operating manual.

AMPERES ELECTRONICS SDN BHD cannot accept any liability whatsoever for any loss or damages caused by service, maintenance or repair by unauthorised personnel, or by use other than that intended by the manufacturer.